T.i.S.
AN ELECTROSTEEL ENTERPRISE

PN 10 - ART. C062 • PN 16 - ART. C063
PN 25 - ART. C064 • PN 40 - ART. C065
PN 64 - ART. C066

VALVOLA DI RITEGNO VENTURI PN10-PN16-PN25-PN40-PN64
VENTURI CHECK VALVE PN10-PN16-PN25-PN40-PN64

APPLICAZIONE:
Stazioni di pompaggio per acqua, chiusura rapida senza colpo d'ariete, basse perdite di carico.

APPLICATION:
Water pumping stations, quick closure without water hammering, low head loss.

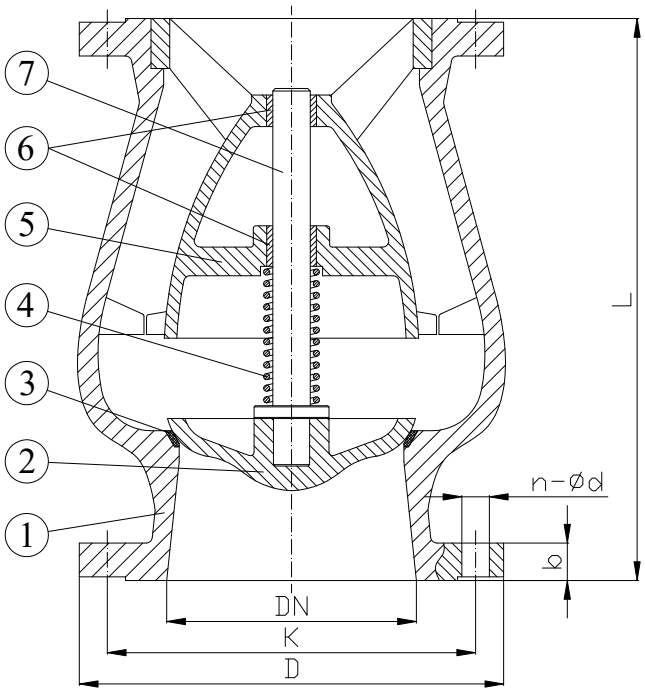

CARATTERISTICHE PRINCIPALI - MAIN FEATURES	
NORMA PROGETTO:	EN 1074-1
FLANGE:	EN 1092-2
COLLAUDI:	EN 12266-1
GRADO DI TENUTA:	Rate B
TEMPERATURA ESERCIZIO:	Max. +90°C
CONTROPRESSIONE:	Min. 0,3 bar
VELOCITÀ DI FLUSSO MASSIMA:	2,5 m/s
DESIGN STANDARD:	EN 1074-1
FLANGES:	EN 1092-2
TESTS:	EN 12266-1
LEAKAGE RATE:	Rate B
WORKING TEMPERATURE:	Max. +90°C
BACKPRESSURE:	Min. 0,3 bar
MAXIMUM FLOW VELOCITY:	2,5 m/s

	COMPONENTI - PARTS		MATERIALI - MATERIALS			
			PN10/16	PN25	PN40	PN64
1	CORPO BODY	DN40 - DN50	GJL250			GJS400
		DN65 - DN400	GJL250	GJS400		
2	OTTURA-TORE OBTURATOR	DN40 - DN200	ACCIAIO INOX AISI 304 STAINLESS STEEL AISI 304			
		DN250 - DN400	GJL250 (solo PN10/16), GJS400 con sede riportata in INOX AISI 304 GJL250 (only PN10/16), GJS400 with welded seat in S. STEEL AISI 304			
3	TENUTA CORPO BODY SEAT		ACCIAIO INOX AISI 304 STAINLESS STEEL AISI 304			
4	MOLLA SPRING		ACCIAIO INOX AISI 304 STAINLESS STEEL AISI 304			
5	OGIVA OGIVE	DN40 - DN100	OTTONE BRASS			
		DN125 - DN400	GJL250	GJS400		
6	BOCCOLA BUSHING	DN200 - DN400	OTTONE BRASS			
7	ALBERO SHAFT		ACCIAIO INOX AISI 304 STAINLESS STEEL AISI 304			

RIVESTIMENTO - COATING
Esterno/interno con polvere epossidica di colore blu RAL 5015 e spessore 100µm.
External/internal FBE coating process with epoxy resin powder of blue colour RAL 5015 and thickness of 100µm.

DN	PN10					PN16					PN25					PN40					PN64					L
	K	D	B	n-0d	kg	K	D	B	n-0d	kg	K	D	B	n-0d	kg	K	D	B	n-0d	kg	K	D	B	n-0d	kg	
40	110	150	19	4-19	7	110	150	19	4-19	7	110	150	19	4-19	7	110	150	19	4-19	7	125	170	28	4-23	12	120
50	125	165	19	4-19	7	125	165	19	4-19	7	125	165	19	4-19	7	125	165	19	4-19	7	135	180	28	4-23	12	120
65	145	185	19	4-19	11	145	185	19	4-19	11	145	185	19	8-19	11	145	185	19	8-19	11	160	205	28	8-23	16	150
80	160	200	19	8-19	13	160	200	19	8-19	13	160	200	19	8-19	14	160	200	19	8-19	14	170	215	31	8-23	16	180
100	180	220	19	8-19	21	180	220	19	8-19	21	190	235	19	8-23	23	190	235	19	8-19	23	200	250	33	8-28	26	240
125	210	250	19	8-19	30	210	250	19	8-19	30	220	270	19	8-28	40	220	270	23.5	8-28	40	240	295	37	8-31	46	300
150	240	285	19	8-23	45	240	285	19	8-23	45	250	300	20	8-28	54	250	300	26	8-28	54	280	345	39	8-34	75	350
200	295	340	20	8-23	75	295	340	20	12-23	75	310	360	22	12-28	100	320	375	30	12-31	106	345	415	46	12-37	125	400
250	350	405	22	12-23	115	355	405	22	12-28	115	370	450	24.5	12-31	130	385	450	34.5	12-34	140	-	-	-	-	-	450
300	400	460	24.5	12-23	135	410	460	24.5	12-28	145	430	485	27.5	16-31	170	-	-	-	-	-	-	-	-	-	-	500
350	460	505	24.5	16-23	210	470	520	26.5	16-28	220	-	-	-	-	-	-	-	-	-	-	-	-	-	-	-	600
400	515	565	24.5	16-28	300	525	580	28	16-31	315	-	-	-	-	-	-	-	-	-	-	-	-	-	-	-	700